ALR.4.200/..

- **car-trafficable**
- **with coating-flange**

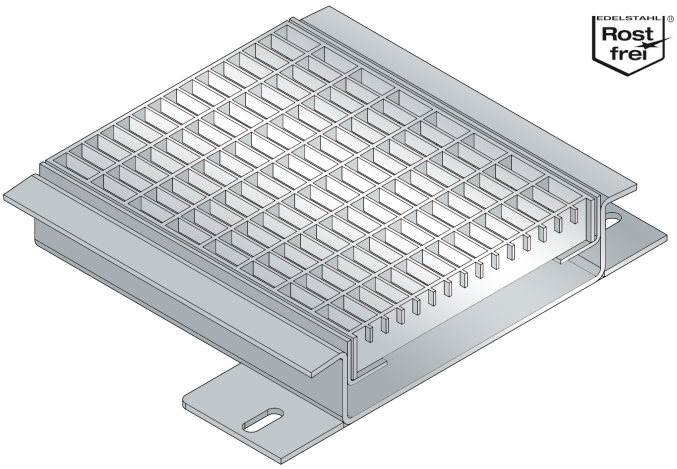

FEATURES
permanently tight, corrosion-resistant, high flexibility (variable lengths, heights and widths), mesh size grating in 30x10 mm (30x30 mm on request)

APPLICATIONS
parking decks, parking garages, underground garages, all industrial applications, shopping centres, railway stations, airports, exhibition halls

MATERIAL
stainless steel V2A (V4A on request)

COVERING TYPES
coating, screed, industrial coverings

TRAFFICABILITY
passenger cars

FORMED PARTS
channel end piece (flange all around or upstand), corner piece, T-piece, cross piece, channel drain, 2-fold locking per grating

NOTES
The individual channel elements are tightly welded together during installation on site.
For stainless steel, the general cleaning and care instructions must be observed (see also download area).
Installation by our own fitters recommended.

TECHNICAL DATA

Material/sheet thickness:	3 mm
Supply length:	3 mtr
Steel grating width:	200 mm

DESIGNS

ARTICLE NO.	CHANNEL HEIGHT (h)	RECESS (BxT)
ALR.4.200/60	60 mm	360 x 70 mm
ALR.4.200/80	80 mm	360 x 90 mm

Special heights on request.

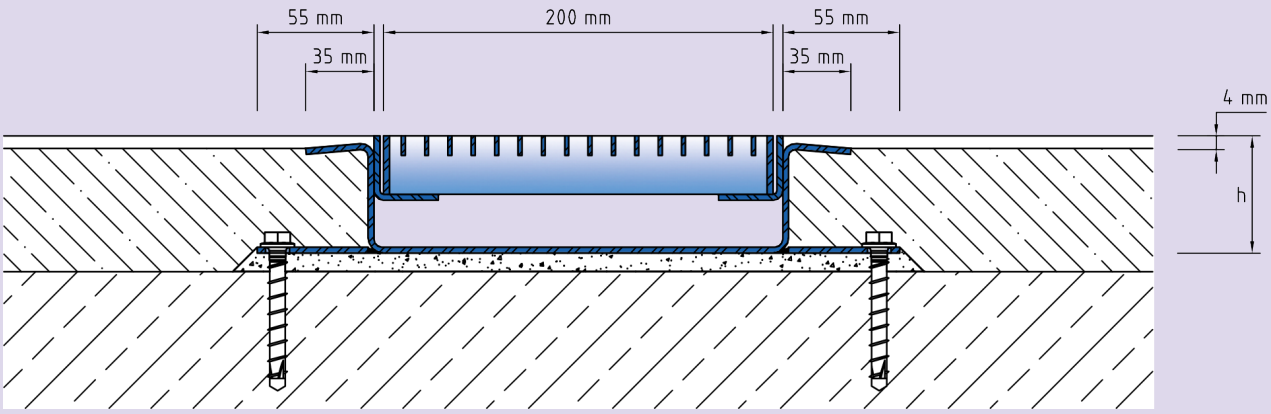

ALR.4.200

Subject to technical change without notice.